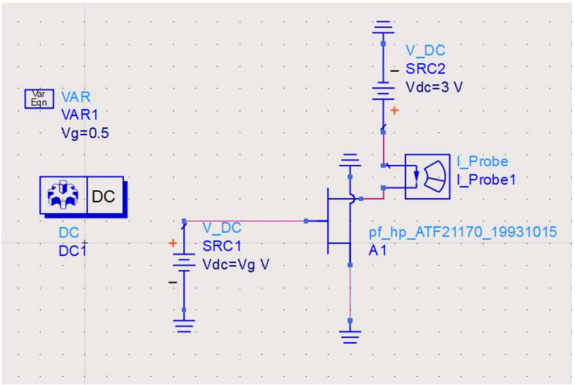
VAR
VAR1
Vg=0.5
DC
DC
DC1
V_DC
SRC1
Vdc=Vg V
V_DC
SRC2
Vdc=3 V
I_Probe
I_Probe1
pf_hp_ATF21170_19931015
A1

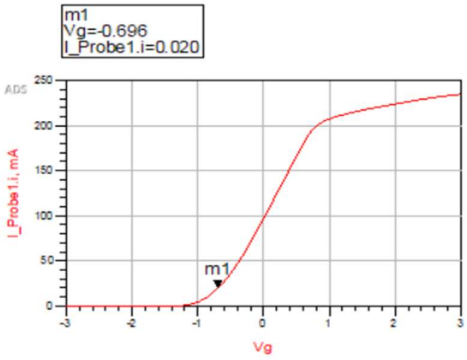
m1
Vg=-0.696
I_Probe1.i=0.020
I_Probe1.i, mA
Vg
m1

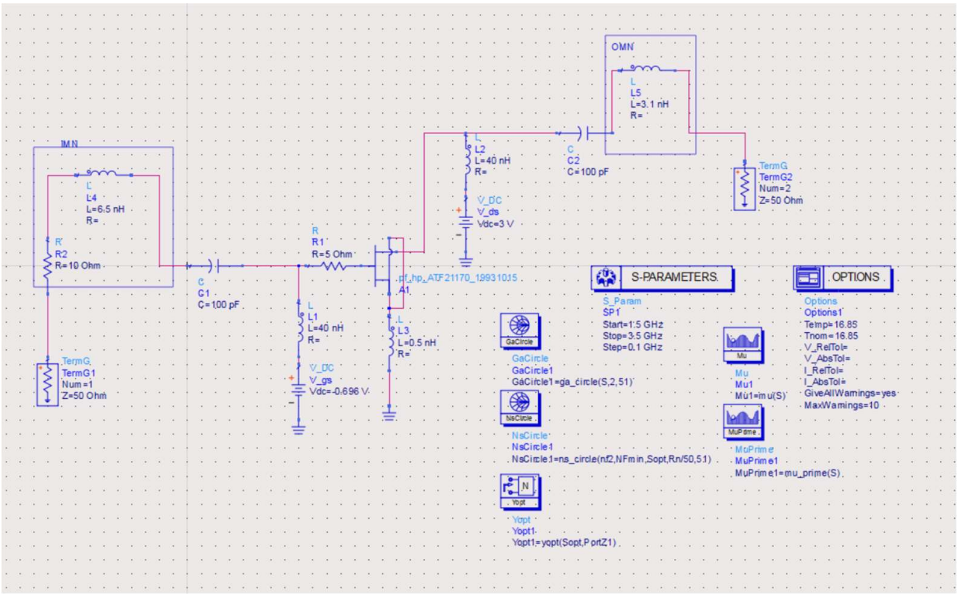
IMN
L
L4
L=6.5 nH
R=
R
R2
R=10 Ohm
TermG
TermG1
Num=1
Z=50 Ohm
C
C1
C=100 pF
R
R1
R=5 Ohm
L
L1
L=40 nH
R=
V_DC
V_gs
Vdc=-0.696 V
pf_hp_ATF21170_19931015
A1
L
L3
L=0.5 nH
R=
L
L2
L=40 nH
R=
V_DC
V_ds
Vdc=3 V
C
C2
C=100 pF
OMN
L
L5
L=3.1 nH
R=
TermG
TermG2
Num=2
Z=50 Ohm
S-PARAMETERS
S_Param
SP1
Start=1.5 GHz
Stop=3.5 GHz
Step=0.1 GHz
OPTIONS
Options
Options1
Temp=16.85
Tnom=16.85
V_RelTol=
V_AbsTol=
I_RelTol=
I_AbsTol=
GiveAllWarnings=yes
MaxWarnings=10
GaCircle
GaCircle1
GaCircle1=ga_circle(S,2,51)
Mu
Mu1
Mu1=mu(S)
NsCircle
NsCircle1
NsCircle1=ns_circle(nf2,NFmin,Sopt,Rn/50,51)
MuPrime
MuPrime1
MuPrime1=mu_prime(S)
Yopt
Yopt1
Yopt1=yopt(Sopt,PortZ1)

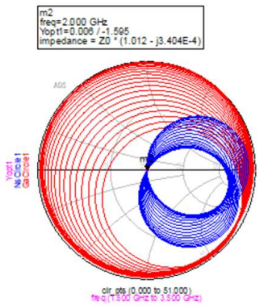
m2
freq=2.000 GHz
Yopt1=0.006 / -1.595
impedance = Z0 * (1.012 - j3.404E-4)
clr_pts (0.000 to 51.000)
freq (1.500 GHz to 3.500 GHz)

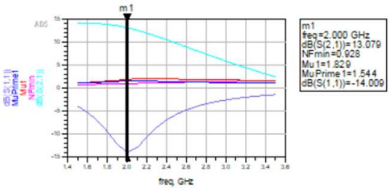
m1
freq=2.000 GHz
dB(S(2,1))=13.079
NFmin=0.928
Mu1=1.829
MuPrime1=1.544
dB(S(1,1))=-14.009
freq, GHz

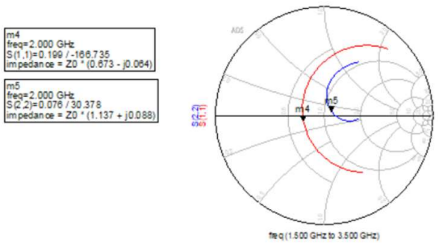
m4
freq=2.000 GHz
S(1,1)=0.199 / -166.735
impedance = Z0 * (0.673 - j0.064)
m5
freq=2.000 GHz
S(2,2)=0.076 / 30.378
impedance = Z0 * (1.137 + j0.088)
m4
m5
freq (1.500 GHz to 3.500 GHz)

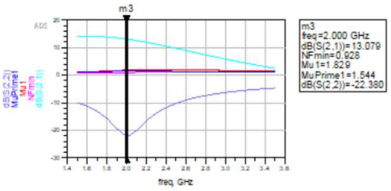
m3
freq=2.000 GHz
dB(S(2,1))=13.079
NFmin=0.928
Mu1=1.829
MuPrime1=1.544
dB(S(2,2))=-22.380
freq, GHz